Grove GMK6300L

North American Product Guide

Features

- (300 t) 350 USt capacity
- 15,6 m - 80 m (51 ft - 263 ft) seven-section full power MEGAFORM™ boom with TWIN-LOCK™ pinning
- 12 m - 21 m (39 ft - 69 ft) hydraulic offset bi-fold swingaway
- 2 x 8 m (26 ft) intermediate lattice inserts
- 92,5 t (203,900 lb) counterweight with hydraulic removal system
- MEGATRAK™ independent hydro-pneumatic suspension
- Allison 4500 SP transmission

Features

MEGATRAK™

The MEGATRAK™ suspension system is the best off road driveline available on the market today. The system's versatility and performance allows the GMK6300L to operate as a true all-terrain crane. The MEGATRAK™ independent suspension and all-wheel steer system allows wheels to remain on the ground at all times so stresses and weight are not continually transferred between axles. MEGATRAK™ provides true ground clearance where others just raise the chassis.

Other benefits of the MEGATRAK™ system are:

- A reliable suspension system
- Excellent job site maneuverability with all-wheel steering
- Commonality among almost all models
- A driveline that remains aligned at all times
- A steering linkage system that is protected against damage
- Constant tire contact for equal tire wear
- Reduced maintenance

CraneSTAR

CraneSTAR is an exclusive and innovative crane asset management system that helps improve your profitability and reduce costs by remotely monitoring critical crane data. Visit www.cranestar.com for more information.

TWIN-LOCK™

Boom pinning mechanism automatically pins the sections in position using two horizontal pins.

ECOS

Electronic Crane Operating System - ECOS enables control of the entire crane's principle operations. Simple programming eases lift planning and a supply of essential information allows full concentration on the lift itself.

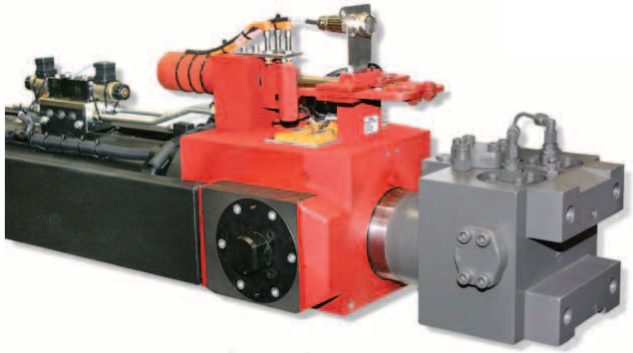

EKS 5

The EKS 5 monitors the lifting conditions of the crane at all times and provides a full graphic display, rear lighting, graphic of boom telescoping percentage, and load charts.

Contents

Specifications	4
Dimensions	7
Weights	8
Counterweight	9
Working range (main boom)	10
Load charts (main boom)	11
Working range (Offsettable swingaway)	16
Load charts (Offsettable swingaway)	17
Working range (Offsettable swingaway with inserts)	19
Load charts (Offsettable swingaway with inserts)	20
Working range (Heavy duty jib)	22
Load charts (Heavy duty jib)	23
Symbols glossary	25

Specifications

Superstructure

Boom

15,6 m - 80 m (51 ft - 263 ft) seven-section, full power MEGAFORM™ boom with TWIN-LOCK™ pinning.

Maximum tip height: 83 m (272 ft).

Boom nose

Nine nylatron sheaves, mounted on heavy duty tapered roller bearings with removable pin-type rope guards. Quick reeve boom nose. Removable auxiliary boom nose with removable pin type rope guard.

Boom elevation

Single lift cylinder with safety valve provides boom angle from -1.5° to +83°.

*Hydraulic offsettable lattice extension

12 m - 21 m (39 ft – 69 ft) bi-fold lattice swingaway extension, hydraulically offsettable and luffing under load, 5°- 40°.
Maximum tip height: 104 m (341 ft)

*Lattice inserts

2 x 8 m (26 ft) inserts for use with lattice swingaway extension to increase length to 37 m (121 ft).
Maximum tip height: 120 m (393 ft)

Load moment and anti-two block system

Load moment and anti-two block system with audio/visual warning and control lever lockout provides electronic display of boom angle, length, radius, tip height, relative load moment, maximum permissible load, load indication and warning of impending two-block condition.

Cab

All aluminum constructed cab with acoustical lining, hydraulic tilted to 20°. Includes tinted safety glass, adjustable operator's seat, opening windows at side and rear, hinged windshield with wiper, sun visor and window shade. Other features include hot water heater/defroster, armrest integrated crane controls, ergonomically arranged instrumentation and radio/CD player.

Swing

3 planetary gear boxes with fixed displacement axial piston motors. Infinitely variable to 1.3 rpm. Free swing or hydrostatically engaged brake controlled by swing lever. Swing brake selected by foot operated switch.

Counterweight

92,5 t (203,900 lb) consisting of various sections with hydraulic installation/removal system controlled from the superstructure cab.

Engine

Mercedes OM 926 LA six-cylinder

Horsepower: 210 kW (286 bhp) at 2200 rpm

Torque: 1120 Nm (826 ft/lb) at 1400 rpm

Engine emissions: EPA/CARB/EUROMOT Tier IVi (non-road)

Fuel tank capacity

300 L (79 gal)

Electrical system

3 phase alternator: 28V/80A

2 batteries: 12V/170Ah

Hydraulic system

2 (two) separate circuits, 1 (one) axial piston variable displacement pump (load sensing) with electronic power limiting control for crane functions and 1 (one) double gear pump for slewing. Thermostatically controlled oil coolers keep oil at optimum operating temperature.

Hydraulic tank capacity: 1200 L (317 gal)

**Denotes optional equipment*

Specifications

Superstructure continued

Hoist

Main and auxiliary hoist are powered by axial piston motor with planetary gear and brake. "Thumb-thumper" hoist drum rotation indicator alerts operator of hoist movement.

	Main	Auxiliary
Rope length:	350 m (1148 ft)	350 m (1148 ft)
Rope diameter:	22 mm	22 mm
Line speed:	127 m/min (417 fpm)	127 m/min (417 fpm)
Line pull:	93.5 kN (21,020 lb)	93.5 kN (21,020 lb)

Hoist camera and light included.

*Optional hookblocks

Lifting capacity	Sheaves	Weight	Parts of line	Possible load with the crane
200 t (220 USt)	9	2400 kg (5291 lb)	2-16	179 t/190 t* (197 USt/209 USt*)
160 t (176 USt)	7	1750 kg (3858 lb)	2-15	135 t (182 USt)
125 t (138 USt)	5	1650 kg (3638 lb)	2-11	100 t (110 USt)
80 t (88 USt)	3	950 kg (2094 lb)	1-7	65 t (72 USt)
32 t ** (35 USt)	1	600 kg (1323 lb)	1-3	28 t (31 USt)
12 t*** (13.2 USt)	H/B	300 kg (661 lb)	1	9,5 t (10.5 USt)

* Requires additional boom nose sheave
** Required for overhaul of single part line with boom/jib lengths in excess of 80 m (262.5 ft)
*** Overhaul weight designed for a maximum of 80 m (262.5 ft) boom/jib lengths

*Optional equipment

- Work lights, mounted on boom base section
- Boom mounted aircraft warning light
- Air conditioning
- Hook blocks/headache ball
- Engine independent diesel cab heater, with engine pre-heater. Includes 24 hour timer.
- Data logger
- 360° NYC swing lock
- 2 m (6.6 ft) side stowed heavy duty jib with 38 t (84,000 lb) maximum capacity using four parts of line, offset 8° and 30°
- Camera system for boom head

Carrier

Chassis

Box type, torsion resistant frame is fabricated from high strength steel.

Outrigger system

Four hydraulic two stage outrigger beams with vertical cylinders and outrigger pads, 700 mm (27.6 in) round. Outrigger can be set in 5 positions:

Full: 8,5 m (27.9 ft)
Partial: 7,4 m (24.3 ft)
Partial: 6,3 m (20.7 ft)
Partial: 5,0 m (16.4 ft)
Retracted: 2,7 m (8.9 ft)

Independent horizontal and vertical movement controlled from each side of carrier and the superstructure cab. Electronic crane level indicators. Hydraulic disconnect for all outrigger beams. Work light for each outrigger beam and outrigger pad load indicator with read out on both sides of carrier and in superstructure cabin. Includes outrigger monitoring system.

Transmission

Allison automatic 4500 SP, 6 speeds forward, 1 reverse

2 speed transfer case

Drive/steer

12x6x12

Specifications

Carrier continued

Axles

1st axle line – drive/steer

2nd axle line – steer

3rd axle line – steer (connects for all wheel steer)

4th axle line – drive/steer (connects for all wheel steer)

5th axle line – drive/steer (permanent drive with 12x6, disconnects for highway with 12x8)

6th axle line – steer (optional drive)

Drive axles with planetary hub reduction and center mounted gearing. Standard inter-axle and cross axle differential locks.

Suspension

Grove exclusive MEGATRAK™ suspension. Independent hydro-pneumatic system acting on all wheels with hydraulic lockout. Suspension can be raised 170 mm (6.7 in) or lowered 126 mm (5.0 in), both longitudinally and transversely. Features an automatic leveling system for highway travel.

Tires

12 tires, 445/95 R25 (16.00 R25)
(vehicle width – 3,00 m [9.8 ft])

Steering

Dual circuit, hydraulic power assisted steering system. Transfer case mounted, ground driven emergency steering pump. Axles 1, 2, 5 and 6 steer on highway. Separate steering (steer by wire) of the 3rd to 6th axles for all wheel and crab steering, controlled by an electronic rocker switch.

Engine

Mercedes-Benz OM 502 LA, eight-cylinder

Horsepower: 405 kW (551 bhp) at 1800 rpm

Torque: 2600 Nm (1918 ft/lb) at 1300 rpm

Engine emissions: EPA /CARB/EUROMOT Tier IVi (non-road)

Fuel tank capacity

500 L (132 gal). Installed on superstructure.

Brakes

Service brakes: pneumatic dual circuit acting on all wheels.

Parking brake: pneumatically operated spring loaded brake acting on axle lines 2, 4, 5 and 6.

Air dryer.

Cab

Two-man, composite designed aluminum and fiber reinforced plastic construction with the following features: safety glass, driver seat with pneumatic suspension, engine-dependent hot water heater, power windows, heated rear view mirrors, complete instrumentation, driving controls, reversing camera system, air conditioning, radio/CD player, 12V plug and fire extinguisher.

Electrical system

24V system with three phase alternator, 28V/100A

2 batteries, 12V/170 Ah

Maximum speed

85 km/h (53 mph)

Gradeability (theoretical)

49% - 14.00 tires

43% - 16.00/20.5 tires

Miscellaneous standard equipment

Work lights, tool kit, fire extinguishers; auxiliary boom nose and wind speed indicator.

*Optional equipment

- 385/95 R 25 tires (14.00 R25)
  (vehicle width – 3,00 m [9.8 ft])
- 525/80 R25 tires (20.5 R25)
  (vehicle width – 3,10 m [10.2 ft])
- 12x8x12 drive/steer; (1, 4, 5 and 6 driven)
- Transmission retarder
- Engine independent diesel cab heater, with engine pre-heater. Includes 24 hour timer.
- Spare tire and wheel with carry bracket
- Rear mounted stowage box
- Trailer hitch
- Optional engine: Tier III Mercedes-Benz OM 502 LA, 420 kW (571 hp) at 1800 rpm. Max. torque: 2200 Nm at 1080 rpm (non-road)

**Denotes optional equipment*

Dimensions

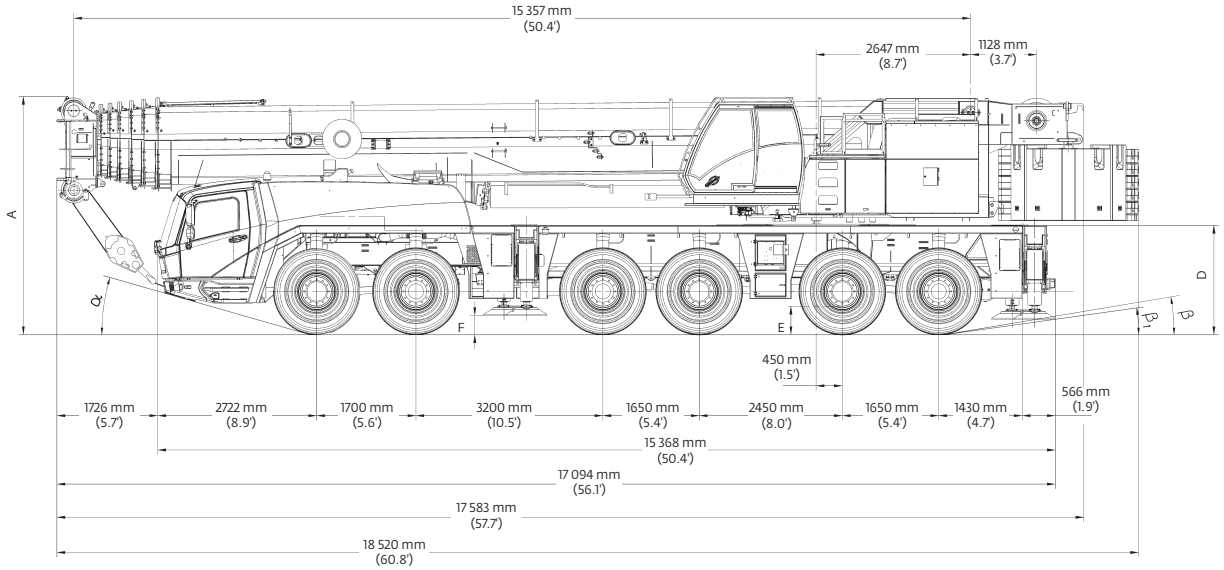

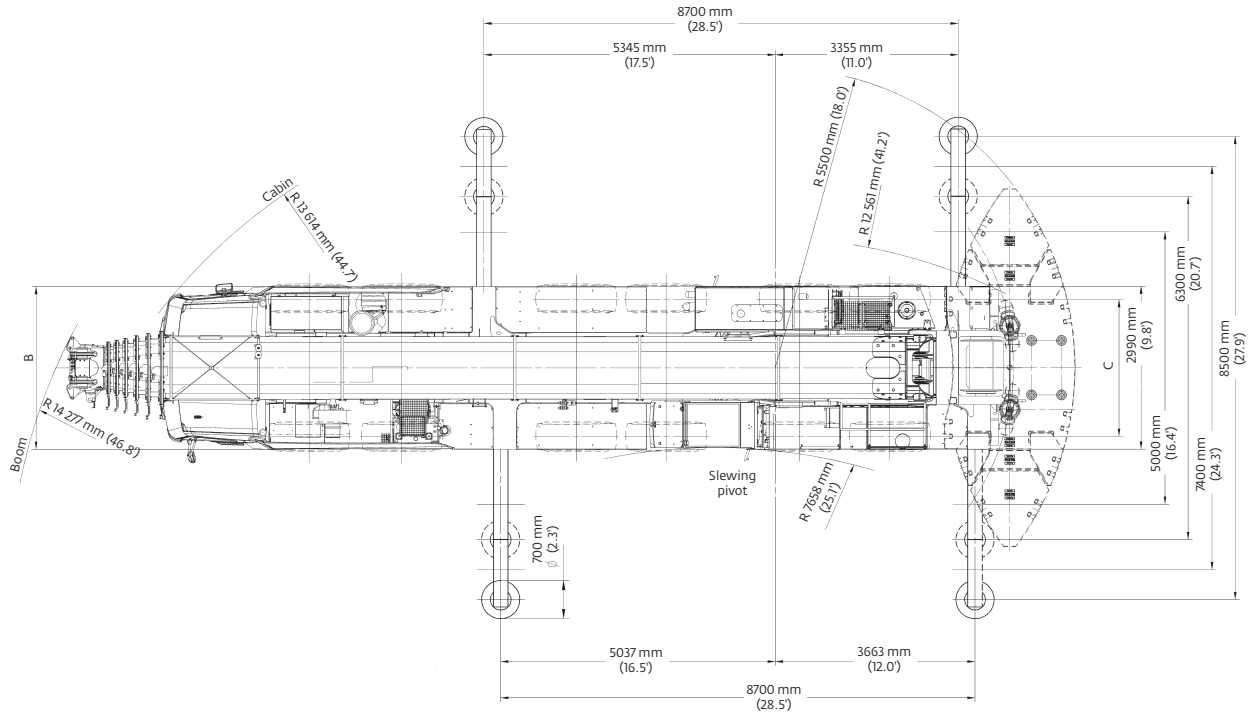

Tires	A	A *130 mm (0.4')	B	C	D	E	F	α	β	β 1
14.00 R25	3950 mm (13.0')	3820 mm (12.5')	2970 mm (9.7')	2570 mm (8.4')	1822 mm (6.0')	400 mm (1.3')	297 mm (1.0')	14°	8°	6°
16.00 R25	4000 mm (13.1')	3870 mm (12.7')	2975 mm (9.8')	2510 mm (8.2')	1872 mm (6.1')	450 mm (1.5')	327 mm (1.1')	16°	10°	8°
20.5 R25	4000 mm (13.1')	3870 mm (12.7')	3070 mm (10.1')	2530 mm (8.3')	1872 mm (6.1')	450 mm (1.5')	327 mm (1.1')	16°	10°	8°

Ra = Radius all wheels steered
°Lowered

Weights

Trailing boom

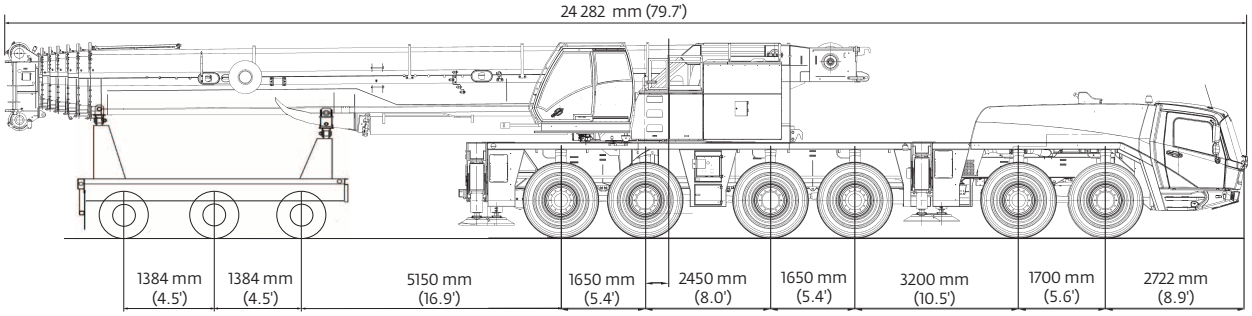

Basic Weights - kg (lb)	Axles 1 and 2		Axles 3 - 6		Three dolly axle		Total	
GMK6300L Tier IVi, Mercedes-Benz power with 20.5 R25 tires, 12x8x12 drive/steer, retarder, 12 m - 21 m (39 ft - 69 ft) hydraulic luffing swingaway, 2nd oil cooler, outrigger pads, auxiliary hoist, driver and tanks filled, three-axle boom dolly (4536 kg [10,000 lb]	14 334	(31,601)	41 171	(90,767)	25 851	(56,992)	81 356	(179,359)
Additions:								
7000 kg (15,400 lb) base section stowed on carrier	3390	(7474)	3270	(7209)	0	(0)	6660	(14,683)
Removals:								
Brackets for hydraulic swingaway including hose reel	- 41	(-90)	- 112	(-247)	- 303	(-668)	- 456	(-1005)
12 m - 21 m (39 ft - 69 ft) hydraulic swingaway	- 73	(-161)	- 196	(-432)	-1738	(-3832)	-2007	(-4425)
Front outriggers	-1516	(-3342)	- 884	(-1949)	0	(0)	-2400	(-5291)
Rear outriggers	1686	(3717)	-4386	(-9669)	0	(0)	-2700	(-5952)
Front and rear outrigger floats	- 1	(-2)	- 281	(-619)	0	(0)	- 282	(-622)
Substitutions:								
12x6x12 drive/steer	147	(324)	- 537	(-1184)	0	(0)	- 390	(-860)
14.00R25 tires	- 412	(-908)	- 825	(-1819)	0	(0)	-1237	(-2727)
16.00R25 tires	- 172	(-379)	- 343	(-756)	0	(0)	- 515	(-1135)

Boom over front

Basic Weights - kg (lb)	Axles 1 and 2		Axles 3 - 6		Total	
Mercedes-Benz power Tier IVi, 16.00 R25 tires, 12x6x12 drive/steer, retarder, 2nd oil cooler, outrigger pads, driver and tanks filled	22 769	(50,197)	48 740	(107,453)	71 509	(157,650)
Additions:						
12x8x12 drive/steer	- 147	(-324)	537	(1184)	390	(860)
Brackets for hydraulic swingaway	57	(126)	29	(64)	86	(190)
Hose reel + parts for hydraulic swingaway	211	(465)	159	(351)	370	(816)
12 m - 21 m (39 ft - 69 ft) hydraulic swingaway	1840	(4057)	167	(368)	2007	(4425)
Auxiliary hoist	-1427	(-3146)	3263	(7194)	1836	(4048)
7000 kg (15,400 lb) base plate stowed on carrier	3390	(7474)	3270	(7209)	6660	(14,683)
Substitutions:						
14.00R25 tires	- 241	(-531)	- 481	(-1060)	- 722	(-1592)
20.5R25 tires	172	(379)	343	(756)	515	(1135)
Removals:						
Front and rear outrigger floats	- 1	(-2)	- 281	(-619)	- 282	(-622)

Counterweight

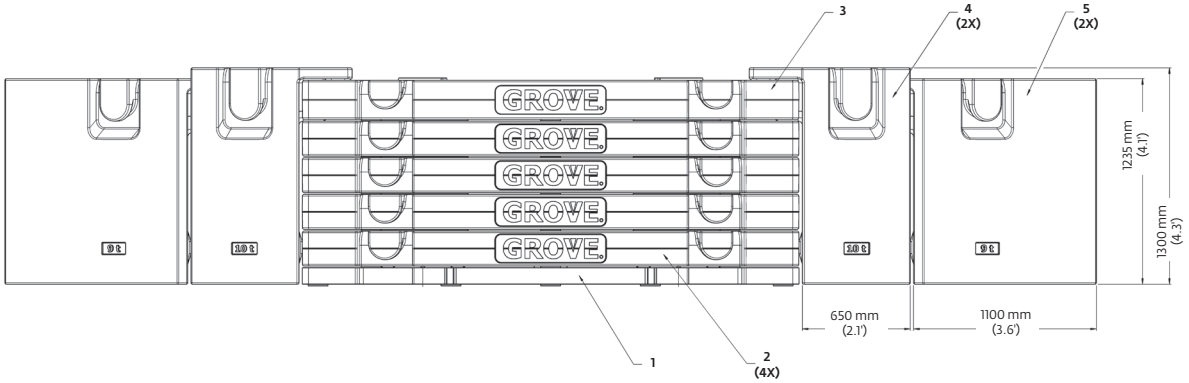

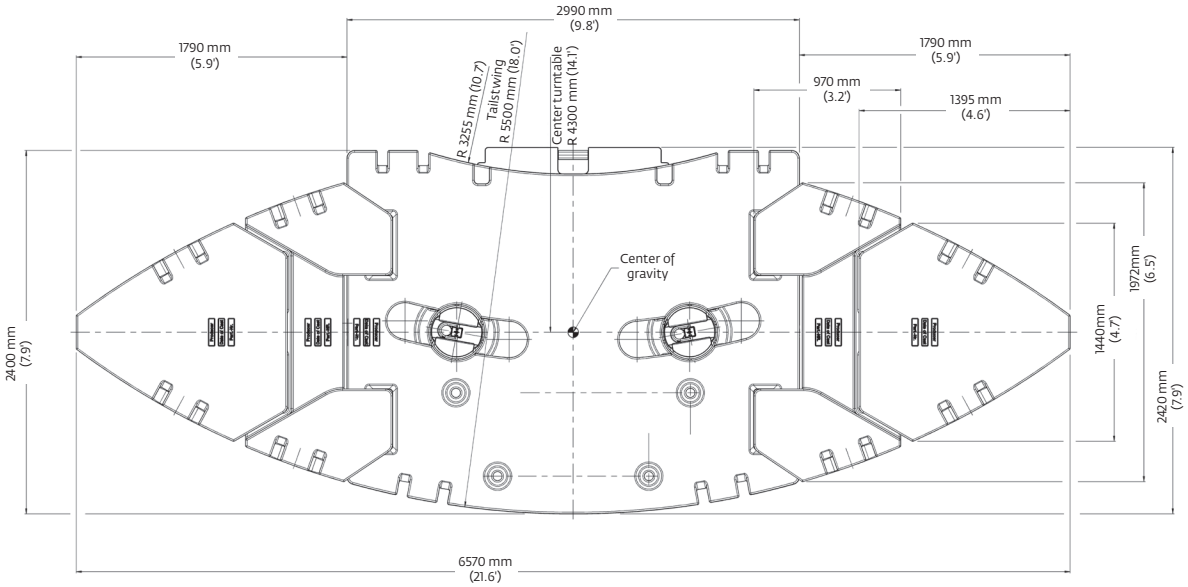

	1 7,0 t (15,430 lb)	**2** 9,5 t (20,940 lb)	**3** 9,5 t (20,940 lb)	**4** 10,0 t (22,050 lb)	**5** 9,0 t (19,840 lb)
7,0 t (15,400 lb)	X	-	-	-	-
16,5 t (36,300 lb)	X	X	-	-	-
26,0 t (57,300 lb)	X	2 X	-	-	-
35,5 t (78,200 lb)	X	3 X	-	-	-
45,0 t (99,200 lb)	X	4 X	-	-	-
54,5 t (120,100 lb)	X	4 X	X	-	-
74,5 t (164,200 lb)	X	4 X	X	2 X	-
92,5 t (203,900 lb)	X	4 X	X	2 X	2 X

Working range
Main boom

51 ft - 263 ft main boom

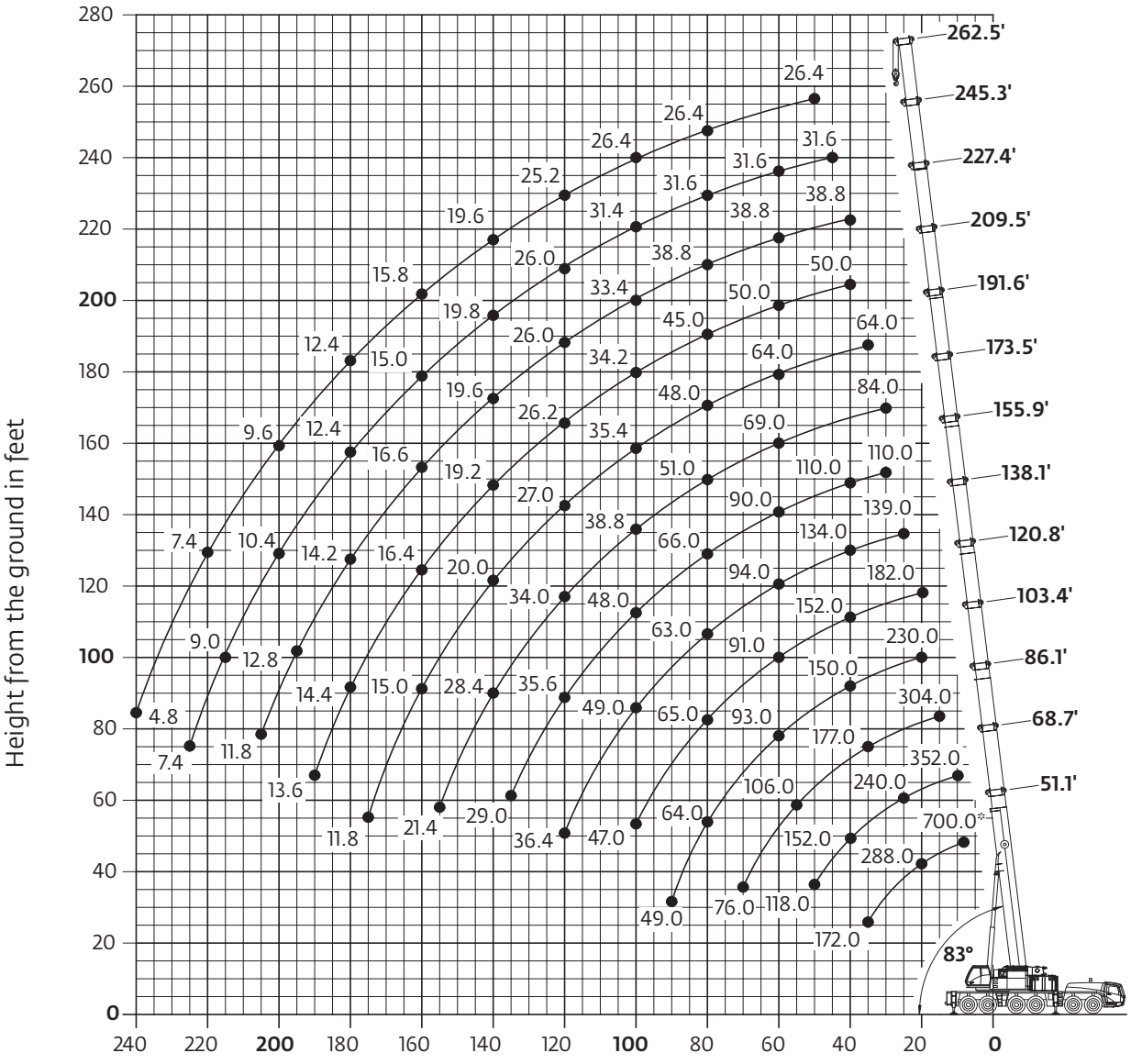

Operating radius in feet from axis of rotation

Hook heights shown in the working diagram do not consider loaded boom deflection.

Hook block	H
200 ton, 9 sheave	12.0 ft (3650 mm)
160 ton, 7 sheave	12.0 ft (3650 mm)
125 ton, 5 sheave	10.8 ft (3300 mm)
80 ton, 3 sheave	10.8 ft (3300 mm)
32 ton, 1 sheave	10.5 ft (3200 mm)
12 ton, single line headache ball	8.0 ft (2450 mm)

Load charts
Main boom

15,6 m - 80 m
(51.1 ft - 262.5 ft)

92 500 kg
(203,900 lb)

27 ft 9 in spread
(100%)

360°

Pounds x 1000

Feet	51.1	68.7	86.1	103.4	120.8	138.1	155.9	173.5	191.6	209.5	227.4	245.3	262.5
8.0	700.0*												
10.0	418.0	352.0											
15.0	348.0	324.0	304.0										
20.0	288.0	276.0	260.0	230.0	182.0								
25.0	244.0	240.0	230.0	217.0	178.0	139.0							
30.0	207.0	207.0	202.0	192.0	178.0	139.0	110.0	84.0					
35.0	172.0	178.0	177.0	171.0	167.0	139.0	110.0	84.0	64.0				
40.0		152.0	152.0	150.0	152.0	134.0	110.0	84.0	64.0	50.0	38.8		
45.0		134.0	132.0	130.0	132.0	124.0	106.0	84.0	64.0	50.0	38.8	31.6	
50.0		118.0	118.0	116.0	116.0	115.0	101.0	81.0	64.0	50.0	38.8	31.6	26.4
55.0			106.0	105.0	103.0	105.0	95.0	75.0	64.0	50.0	38.8	31.6	26.4
60.0			94.0	93.0	91.0	94.0	90.0	69.0	64.0	50.0	38.8	31.6	26.4
65.0			85.0	84.0	82.0	84.0	84.0	64.0	59.0	50.0	38.8	31.6	26.4
70.0			76.0	76.0	76.0	76.0	79.0	59.0	55.0	50.0	38.8	31.6	26.4
75.0				69.0	71.0	69.0	72.0	55.0	52.0	48.0	38.8	31.6	26.4
80.0				64.0	65.0	63.0	66.0	51.0	48.0	45.0	38.8	31.6	26.4
85.0				61.0	60.0	58.0	60.0	47.0	44.0	42.4	38.8	31.6	26.4
90.0				49.0	55.0	55.0	56.0	43.2	40.6	39.4	37.2	31.6	26.4
95.0					51.0	52.0	51.0	40.4	37.8	36.6	35.4	31.6	26.4
100.0					47.0	49.0	48.0	38.8	35.4	34.2	33.4	31.4	26.4
105.0						46.0	44.0	37.4	32.8	31.8	31.6	30.0	26.4
110.0						43.0	41.0	36.2	30.8	30.0	29.6	28.8	26.4
115.0						40.2	38.2	35.0	28.8	28.0	27.8	27.4	26.4
120.0						36.4	35.6	34.0	27.0	26.2	26.0	26.0	25.2
125.0							33.0	33.0	25.4	24.6	24.6	24.6	24.2
130.0							30.6	32.0	23.8	23.0	23.0	23.4	22.6
135.0							29.0	30.6	22.0	21.2	21.2	21.6	20.8
140.0								28.4	20.0	19.2	19.6	19.8	19.6
145.0								26.6	18.2	18.2	18.8	18.0	18.6
150.0								24.8	17.2	17.6	18.0	17.0	17.6
155.0								21.4	16.0	17.0	17.2	16.0	16.8
160.0									15.0	16.4	16.6	15.0	15.8
165.0									14.0	15.8	16.0	14.4	14.8
170.0									13.2	15.4	15.4	13.8	14.0
175.0									11.8	14.8	14.8	13.0	13.2
180.0										14.4	14.2	12.4	12.4
185.0										14.0	13.8	12.0	11.8
190.0										13.6	13.2	11.4	11.0
195.0											12.8	10.8	10.4
200.0											12.2	10.4	9.6
205.0											11.8	9.8	9.0
210.0												9.4	8.4
215.0												9.0	8.0
220.0												8.6	7.4
225.0												7.4	6.8
230.0													6.4
235.0													5.6
240.0													4.8

** Over the rear with special equipment*

Loads greater than 376,000 lb can only be lifted with special equipment.

Load charts
Main boom

15,6 m - 80 m
(51.1 ft - 262.5 ft)

74 500 kg
(164,200 lb)

27 ft 9 in spread
(100%)

360°

Pounds x 1000

Feet	51.1	68.7	86.1	103.4	120.8	138.1	155.9	173.5	191.6	209.5	227.4	245.3	262.5
10.0	418.0	352.0											
15.0	348.0	324.0	304.0										
20.0	286.0	276.0	260.0	230.0	182.0								
25.0	240.0	240.0	230.0	217.0	178.0	139.0							
30.0	195.0	196.0	196.0	192.0	178.0	139.0	110.0	84.0					
35.0	163.0	165.0	164.0	162.0	165.0	139.0	110.0	84.0	64.0				
40.0		142.0	141.0	140.0	140.0	134.0	110.0	84.0	64.0	50.0	38.8		
45.0		122.0	123.0	122.0	120.0	121.0	106.0	84.0	64.0	50.0	38.8	31.6	
50.0		107.0	108.0	107.0	105.0	105.0	101.0	81.0	64.0	50.0	38.8	31.6	26.4
55.0			95.0	94.0	96.0	93.0	94.0	75.0	64.0	50.0	38.8	31.6	26.4
60.0			85.0	84.0	86.0	83.0	84.0	69.0	64.0	50.0	38.8	31.6	26.4
65.0			76.0	78.0	78.0	74.0	75.0	64.0	59.0	50.0	38.8	31.6	26.4
70.0			69.0	71.0	70.0	69.0	68.0	59.0	55.0	50.0	38.8	31.6	26.4
75.0				65.0	64.0	65.0	62.0	55.0	52.0	48.0	38.8	31.6	26.4
80.0				59.0	58.0	60.0	56.0	51.0	48.0	45.0	38.8	31.6	26.4
85.0				54.0	52.0	55.0	52.0	47.0	44.0	42.4	38.8	31.6	26.4
90.0				49.0	49.0	50.0	47.0	43.2	40.6	39.4	37.2	31.6	26.4
95.0					47.0	46.0	43.4	40.4	37.8	36.6	35.4	31.6	26.4
100.0					43.6	42.0	39.6	38.8	35.0	34.2	33.4	31.4	26.4
105.0						38.4	36.0	37.4	32.2	31.6	31.6	30.0	26.4
110.0						35.4	33.6	35.2	29.4	29.0	29.4	28.8	26.4
115.0						32.6	32.6	32.4	27.0	26.6	27.0	27.4	26.4
120.0						30.0	31.4	29.8	24.8	24.4	25.0	25.6	25.2
125.0							30.0	27.4	22.6	22.6	23.8	23.6	24.2
130.0							27.8	25.4	20.4	21.4	22.2	21.8	22.6
135.0							25.8	23.4	18.4	20.0	20.8	20.2	20.8
140.0								21.6	17.4	19.0	19.6	18.6	19.6
145.0								20.0	16.8	18.2	18.8	17.4	18.2
150.0								18.4	16.0	17.6	18.0	16.6	16.8
155.0								17.0	15.4	17.0	17.2	15.8	15.6
160.0									15.0	16.4	16.6	15.0	14.4
165.0									14.4	15.8	16.0	14.4	13.2
170.0									14.0	14.8	14.8	13.8	12.2
175.0									13.4	13.8	13.6	12.8	11.0
180.0										12.8	12.6	11.8	10.0
185.0										12.4	11.6	10.8	9.0
190.0										11.8	10.8	9.8	8.0
195.0											9.8	9.0	7.2
200.0											9.0	8.0	6.2
205.0											8.6	7.2	5.4
210.0												6.6	4.6
215.0												5.8	4.0
220.0												5.0	3.2
225.0												4.4	

Loads greater than 376,000 lb can only be lifted with special equipment.

THIS CHART IS ONLY A GUIDE AND SHOULD NOT BE USED TO OPERATE THE CRANE.
The individual crane's load chart, operating instructions and other instructional plates must be read and understood prior to operating the crane

Load charts
Main boom

15,6 m - 80 m
(51.1 ft - 262.5 ft)

54 500 kg
(120,200 lb)

27 ft 9 in spread
(100%)

360°

Pounds x 1000

Feet	51.1	68.7	86.1	103.4	120.8	138.1	155.9	173.5	191.6	209.5	227.4	245.3	262.5
10.0	418.0	352.0											
15.0	344.0	324.0	304.0										
20.0	278.0	276.0	260.0	230.0	182.0								
25.0	219.0	220.0	220.0	217.0	178.0	139.0							
30.0	177.0	180.0	177.0	175.0	164.0	139.0	110.0	84.0					
35.0	145.0	149.0	150.0	145.0	140.0	131.0	110.0	84.0	64.0				
40.0		126.0	126.0	121.0	119.0	111.0	110.0	84.0	64.0	50.0	38.8		
45.0		108.0	109.0	108.0	102.0	96.0	95.0	84.0	64.0	50.0	38.8	31.6	
50.0		95.0	94.0	94.0	88.0	89.0	83.0	77.0	64.0	50.0	38.8	31.6	26.4
55.0			81.0	82.0	77.0	78.0	73.0	68.0	64.0	50.0	38.8	31.6	26.4
60.0			73.0	73.0	71.0	69.0	65.0	60.0	57.0	50.0	38.8	31.6	26.4
65.0			64.0	64.0	66.0	62.0	58.0	53.0	51.0	50.0	38.8	31.6	26.4
70.0			57.0	57.0	60.0	56.0	52.0	51.0	46.0	44.0	38.8	31.6	26.4
75.0				51.0	54.0	51.0	46.0	48.0	40.8	39.8	38.4	31.6	26.4
80.0				48.0	48.0	46.0	42.6	43.2	36.6	35.8	36.0	31.6	26.4
85.0				43.8	43.4	41.6	40.8	39.4	32.8	32.8	33.4	31.6	26.4
90.0				39.8	39.2	37.4	39.0	36.0	29.6	31.0	32.0	31.6	26.4
95.0					35.4	34.4	36.2	32.8	27.8	29.6	30.6	30.6	26.4
100.0					32.2	33.2	33.0	30.0	26.4	28.2	29.2	28.0	25.4
105.0						31.8	30.0	27.4	25.0	27.0	27.4	25.8	23.2
110.0						29.2	27.4	24.8	24.0	25.8	25.2	23.6	21.2
115.0						26.8	25.0	22.4	22.8	24.2	23.8	21.6	19.2
120.0						24.6	22.8	20.2	21.4	23.0	22.0	20.0	17.6
125.0							20.8	18.2	19.6	22.0	19.8	18.2	16.0
130.0							19.0	16.4	18.8	20.4	18.8	16.8	14.4
135.0							17.4	14.8	18.2	18.8	17.2	15.4	13.0
140.0								13.2	17.4	17.2	15.6	14.0	11.8
145.0								11.8	16.0	15.8	14.2	12.8	10.6
150.0								10.6	14.8	14.4	13.0	11.4	9.4
155.0								9.4	14.0	13.2	11.6	10.2	8.4
160.0									12.8	12.0	10.6	9.0	7.2
165.0									11.8	11.0	9.4	8.0	6.2
170.0									10.8	10.0	8.4	7.0	5.2
175.0									9.8	9.0	7.6	6.0	4.2
180.0										8.0	6.6	5.2	3.4
185.0										7.2	5.8	4.4	
190.0										6.4	5.0	3.6	
195.0											4.2	2.8	
200.0											3.6		
205.0											3.0		

15,6 m - 80 m
(51.1 ft - 262.5 ft)

45 000 kg
(99,200 lb)

27 ft 9 in spread
(100%)

360°

Pounds x 1000

Feet	51.1	68.7	86.1	103.4	120.8	138.1	155.9	173.5	191.6	209.5	227.4	245.3	262.5
10.0	418.0	352.0											
15.0	340.0	324.0	304.0										
20.0	268.0	266.0	260.0	230.0	182.0								
25.0	209.0	210.0	210.0	193.0	178.0	139.0							
30.0	166.0	170.0	169.0	157.0	152.0	139.0	110.0	84.0					
35.0	137.0	140.0	136.0	132.0	125.0	116.0	110.0	84.0	64.0				
40.0		119.0	113.0	111.0	105.0	102.0	97.0	84.0	64.0	50.0	38.8		
45.0		99.0	96.0	95.0	90.0	89.0	83.0	77.0	64.0	50.0	38.8	31.6	
50.0		83.0	86.0	82.0	83.0	78.0	72.0	67.0	64.0	50.0	38.8	31.6	26.4
55.0			73.0	72.0	73.0	68.0	63.0	59.0	56.0	50.0	38.8	31.6	26.4
60.0			63.0	63.0	64.0	60.0	56.0	56.0	49.0	48.0	38.8	31.6	26.4
65.0			56.0	58.0	58.0	54.0	50.0	50.0	43.2	42.0	38.8	31.6	26.4
70.0			51.0	52.0	51.0	48.0	48.0	45.0	38.2	38.4	38.0	31.6	26.4
75.0				46.0	46.0	43.4	45.0	40.6	34.6	36.4	36.6	31.6	26.4
80.0				41.2	40.6	39.2	40.6	36.8	32.6	34.4	34.8	31.6	26.4
85.0				36.8	36.2	37.6	37.0	33.2	30.8	32.8	33.0	30.6	26.4
90.0				33.0	32.6	35.2	33.4	30.0	29.2	30.6	30.2	27.8	25.2
95.0					31.2	31.8	30.0	27.2	27.8	29.2	27.6	25.4	22.8
100.0					29.8	28.8	27.0	24.4	26.4	27.4	25.2	23.0	20.6
105.0						26.2	24.4	21.8	25.0	25.2	23.0	21.0	18.4
110.0						23.8	22.0	19.4	23.8	23.2	21.2	19.0	16.6
115.0						21.8	20.0	17.2	21.6	21.4	19.4	17.4	15.0
120.0						19.8	18.0	15.4	19.8	19.4	17.6	15.8	13.4
125.0							16.2	13.6	18.4	17.6	16.2	14.2	11.8
130.0							15.2	12.0	16.8	16.0	14.6	12.8	10.6
135.0							14.4	10.6	15.2	14.4	13.0	11.4	9.2
140.0								9.2	13.8	13.2	11.6	10.2	8.0
145.0								8.0	12.6	11.8	10.4	8.8	7.0
150.0								6.8	11.4	10.6	9.2	7.6	5.8
155.0								5.8	10.4	9.6	8.0	6.6	4.8
160.0									9.4	8.4	7.0	5.6	3.6
165.0									8.4	7.6	6.0	4.6	2.8
170.0									7.4	6.6	5.2	3.6	
175.0									6.6	5.8	4.4	2.8	
180.0										5.0	3.6		
185.0										4.2	2.8		
190.0										3.6			

Loads greater than 376,000 lb can only be lifted with special equipment.

THIS CHART IS ONLY A GUIDE AND SHOULD NOT BE USED TO OPERATE THE CRANE.
The individual crane's load chart, operating instructions and other instructional plates must be read and understood prior to operating the crane

Load charts
Main boom

15,6 m - 80 m (51.1 ft - 262.5 ft) | **35 500 kg (78,200 lb)** | **27 ft 9 in spread (100%)** | **360˚**

Pounds x 1000

Feet	51.1	68.7	86.1	103.4	120.8	138.1	155.9	173.5	191.6	209.5	227.4	245.3	262.5
10.0	418.0	352.0											
15.0	336.0	324.0	304.0										
20.0	256.0	258.0	256.0	230.0	182.0								
25.0	197.0	199.0	190.0	177.0	169.0	139.0							
30.0	156.0	157.0	148.0	143.0	133.0	122.0	110.0	84.0					
35.0	123.0	128.0	119.0	116.0	109.0	107.0	99.0	84.0	64.0				
40.0		104.0	102.0	97.0	96.0	90.0	83.0	77.0	64.0	50.0	38.8		
45.0		84.0	86.0	82.0	83.0	77.0	71.0	67.0	62.0	50.0	38.8	31.6	
50.0		69.0	72.0	73.0	71.0	67.0	61.0	62.0	54.0	50.0	38.8	31.6	26.4
55.0			64.0	66.0	63.0	58.0	56.0	54.0	47.0	46.0	38.8	31.6	26.4
60.0			55.0	57.0	55.0	51.0	53.0	48.0	41.4	42.8	38.8	31.6	26.4
65.0			48.0	49.0	49.0	47.0	47.0	42.4	38.8	40.4	38.0	31.6	26.4
70.0			42.0	43.2	42.6	44.0	41.8	37.8	36.6	37.6	36.6	31.6	26.4
75.0				38.0	37.4	40.4	37.6	33.6	34.6	35.6	33.4	30.8	26.4
80.0				33.6	35.6	35.8	34.0	30.0	32.6	32.4	30.0	27.4	24.6
85.0				30.0	32.8	32.0	30.2	26.8	30.6	29.4	27.0	24.6	21.8
90.0				28.8	29.4	28.6	26.8	24.0	28.2	26.6	24.4	22.0	19.4
95.0					26.4	26.2	23.8	21.2	25.6	24.2	22.0	19.8	17.2
100.0					23.8	25.0	21.2	18.6	23.4	22.0	19.8	17.6	15.2
105.0						22.8	19.4	16.2	21.2	20.0	17.8	15.8	13.4
110.0						20.6	18.6	14.2	19.0	18.2	16.2	14.0	11.6
115.0						18.8	17.6	12.2	17.2	16.4	14.4	12.4	10.2
120.0						17.0	16.6	10.6	15.4	14.6	13.0	11.0	8.8
125.0							15.2	9.0	13.8	13.0	11.6	9.8	7.4
130.0							13.8	7.6	12.4	11.6	10.2	8.4	6.2
135.0							12.4	6.4	11.0	10.2	8.8	7.2	5.2
140.0								5.2	9.8	9.0	7.6	6.0	4.0
145.0								4.0	8.8	8.0	6.4	5.0	3.0
150.0								3.0	7.6	6.8	5.4	4.0	
155.0									6.6	5.8	4.4	3.0	
160.0									5.8	5.0	3.6		
165.0									5.0	4.2	2.6		
170.0									4.2	3.4			
175.0									3.4				

15,6 m - 80 m (51.1 ft - 262.5 ft) | **26 000 kg (57,300 lb)** | **27 ft 9 in spread (100%)** | **360˚**

Pounds x 1000

Feet	51.1	68.7	86.1	103.4	120.8	138.1	155.9	173.5	191.6	209.5	227.4	245.3	262.5
10.0	418.0	352.0											
15.0	330.0	324.0	304.0										
20.0	244.0	246.0	222.0	197.0	182.0								
25.0	185.0	179.0	166.0	159.0	146.0	133.0							
30.0	137.0	137.0	130.0	123.0	114.0	112.0	103.0	84.0					
35.0	101.0	109.0	105.0	99.0	99.0	92.0	84.0	77.0	64.0				
40.0		86.0	87.0	87.0	82.0	77.0	70.0	70.0	61.0	50.0	38.8		
45.0		69.0	73.0	74.0	70.0	65.0	64.0	60.0	51.0	49.0	38.8	31.6	
50.0		58.0	63.0	64.0	60.0	56.0	57.0	52.0	48.0	47.0	38.8	31.6	26.4
55.0			53.0	54.0	52.0	52.0	49.0	45.0	45.0	43.6	38.0	31.6	26.4
60.0			45.0	46.0	46.0	47.0	43.2	38.6	41.4	40.6	36.8	31.6	26.4
65.0			38.4	39.8	41.8	41.4	38.0	33.8	37.8	35.8	33.0	30.2	26.4
70.0			33.0	35.0	37.6	36.8	33.6	29.4	33.8	31.8	29.2	26.6	23.6
75.0				32.4	33.0	32.8	29.8	25.8	30.2	28.4	26.0	23.4	20.6
80.0				28.6	29.2	30.6	27.8	22.6	27.0	25.4	23.0	20.6	18.0
85.0				25.2	25.8	27.2	26.2	19.8	24.2	22.8	20.4	18.2	15.6
90.0				22.4	22.8	24.2	24.0	17.4	21.8	20.4	18.2	16.0	13.4
95.0					20.2	21.6	21.4	15.0	19.6	18.2	16.0	14.0	11.4
100.0					18.0	19.2	19.2	12.8	17.6	16.2	14.2	12.2	9.6
105.0						17.2	17.0	10.6	15.6	14.6	12.6	10.4	8.0
110.0						15.4	15.2	9.0	13.8	13.0	11.0	9.0	6.6
115.0						13.8	13.6	7.2	12.2	11.4	9.6	7.6	5.4
120.0						12.2	12.0	5.8	10.6	9.8	8.2	6.4	4.0
125.0							10.6	4.4	9.2	8.4	7.0	5.2	3.0
130.0							9.4	3.2	8.0	7.2	5.8	4.2	
135.0							8.2		6.8	6.0	4.6	3.0	
140.0									5.8	5.0	3.6		
145.0									4.8	4.0			
150.0									4.0	3.2			
155.0									3.0				

Loads greater than 376,000 lb can only be lifted with special equipment.

THIS CHART IS ONLY A GUIDE AND SHOULD NOT BE USED TO OPERATE THE CRANE.
The individual crane's load chart, operating instructions and other instructional plates must be read and understood prior to operating the crane

Load charts
Main boom

15,6 m - 80 m (51.1 ft - 262.5 ft) | 16 500 kg (36,400 lb) | 27 ft 9 in spread (100%) | 360°

Pounds x 1000

Feet	51.1	68.7	86.1	103.4	120.8	138.1	155.9	173.5	191.6	209.5	227.4	245.3	262.5
10.0	418.0	352.0											
15.0	320.0	320.0	292.0										
20.0	228.0	209.0	190.0	182.0	164.0								
25.0	159.0	153.0	144.0	134.0	122.0	119.0							
30.0	109.0	114.0	110.0	105.0	101.0	94.0	85.0	79.0					
35.0	79.0	88.0	87.0	88.0	82.0	76.0	74.0	68.0	58.0				
40.0		68.0	75.0	72.0	68.0	64.0	63.0	56.0	53.0	47.0	38.8		
45.0		55.0	60.0	60.0	56.0	57.0	53.0	47.0	50.0	46.0	38.0	31.6	
50.0		45.0	49.0	51.0	52.0	49.0	45.0	39.8	43.8	41.4	37.4	31.6	26.4
55.0			40.8	42.2	45.0	43.0	39.6	33.8	38.0	35.8	32.8	29.8	26.4
60.0			34.2	38.4	39.0	38.8	36.6	28.8	33.2	31.2	28.4	25.6	22.4
65.0			29.2	32.8	33.4	34.2	32.8	24.6	29.0	27.2	24.6	22.0	19.0
70.0			24.8	28.2	29.4	30.2	29.0	21.0	25.6	23.8	21.4	18.8	16.0
75.0				24.4	25.4	26.2	25.6	18.0	22.4	20.8	18.6	16.0	13.2
80.0				21.0	22.2	23.0	22.8	15.2	19.8	18.2	16.0	13.6	11.0
85.0				18.2	19.2	20.0	20.0	12.8	17.4	16.0	13.6	11.4	8.8
90.0				15.8	16.8	17.6	17.4	10.6	15.2	13.8	11.6	9.4	7.0
95.0					14.6	15.4	15.2	8.6	13.4	12.0	9.8	7.8	5.2
100.0					12.6	13.4	13.2	6.8	11.6	10.4	8.2	6.2	3.8
105.0						11.6	11.6	5.2	10.0	8.8	6.8	4.8	
110.0						10.2	10.0	3.6	8.6	7.4	5.4	3.6	
115.0						8.8	8.6		7.2	6.2	4.2		
120.0						7.4	7.2		5.8	5.0	3.2		
125.0							6.0		4.6	4.0			
130.0							5.0		3.6	2.8			
135.0							4.0		2.6				

15,6 m - 80 m (51.1 ft - 262.5 ft) | 7000 kg (15,400 lb) | 27 ft 9 in spread (100%) | 360°

Pounds x 1000

Feet	51.1	68.7	86.1	103.4	120.8	138.1	155.9	173.5	191.6
10.0	414.0	352.0							
15.0	304.0	288.0	248.0						
20.0	191.0	178.0	165.0	150.0	134.0				
25.0	125.0	124.0	118.0	115.0	106.0	96.0			
30.0	82.0	91.0	92.0	87.0	81.0	77.0	73.0	60.0	
35.0	58.0	68.0	71.0	69.0	66.0	64.0	58.0	58.0	49.0
40.0		52.0	57.0	55.0	56.0	55.0	47.0	49.0	46.0
45.0		40.0	45.0	48.0	47.0	46.0	39.0	41.4	38.2
50.0		31.2	36.2	40.2	39.6	38.8	32.2	34.8	32.0
55.0			29.6	33.2	33.4	32.8	26.6	29.4	27.0
60.0			24.2	27.6	28.4	28.0	22.2	25.0	22.8
65.0			19.6	23.2	24.2	24.0	18.4	21.4	19.2
70.0			16.0	19.4	20.6	20.6	15.4	18.2	16.4
75.0				16.2	17.4	17.6	12.6	15.6	13.8
80.0				13.4	14.6	15.2	10.2	13.4	11.6
85.0				11.2	12.2	13.0	8.2	11.2	9.6
90.0				9.2	10.2	11.0	6.4	9.6	7.8
95.0					8.4	9.2	4.8	8.0	6.4
100.0					6.8	7.6	3.4	6.6	5.0
105.0						6.2		5.2	3.8
110.0						4.8		4.0	2.6
115.0						3.8		3.0	
120.0						2.8			

15,6 m - 80 m (51.1 ft - 262.5 ft) | 0 kg (0 lb) | 27 ft 9 in spread (100%) | 360°

Pounds x 1000

Feet	51.1	68.7	86.1	103.4	120.8	138.1	155.9	173.3	191.6
10.0	410.0	352.0							
15.0	290.0	252.0	211.0						
20.0	160.0	151.0	140.0	128.0	121.0				
25.0	98.0	103.0	102.0	96.0	87.0	84.0			
30.0	62.0	74.0	74.0	70.0	70.0	67.0	58.0	59.0	
35.0	42.4	53.0	57.0	58.0	56.0	53.0	45.0	47.0	42.8
40.0		39.0	43.4	46.0	44.0	42.6	35.0	37.4	34.2
45.0		29.2	34.6	36.4	35.6	34.6	27.8	30.6	27.6
50.0		21.8	27.2	29.4	29.0	28.4	22.2	25.0	22.6
55.0			21.4	24.0	23.8	23.6	17.6	20.6	18.4
60.0			16.8	19.6	19.8	19.6	14.0	17.0	15.0
65.0			13.0	16.2	16.2	16.2	11.0	14.0	12.0
70.0			9.8	13.2	13.4	13.4	8.4	11.4	9.6
75.0				10.4	11.0	11.0	6.2	9.2	7.6
80.0				8.2	8.8	9.0	4.2	7.4	5.8
85.0				6.2	7.0	7.2		5.8	4.2
90.0				4.6	5.4	5.8		4.2	2.8
95.0					4.0	4.4		3.0	
100.0					2.6	3.2			

Loads greater than 376,000 lb can only be lifted with special equipment.

THIS CHART IS ONLY A GUIDE AND SHOULD NOT BE USED TO OPERATE THE CRANE.
The individual crane's load chart, operating instructions and other instructional plates must be read and understood prior to operating the crane

Working range
Hydraulic offsettable swingaway

263 ft main boom with 39 ft - 69 ft swingaway

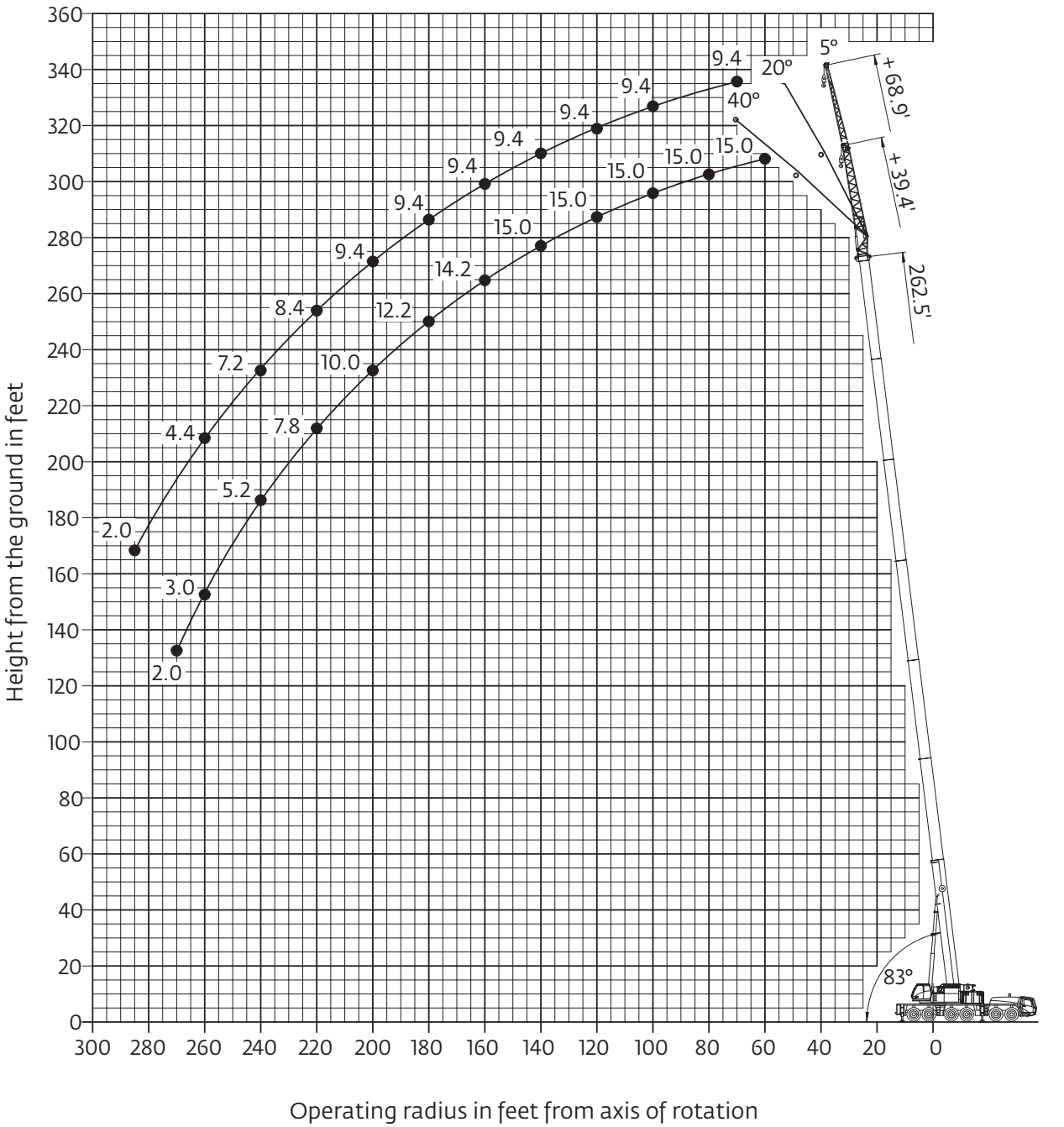

Hook heights shown in the working diagram do not consider loaded boom deflection.

Load charts
Hydraulic offsettable swingaway

Intermediate angle and loads for luffing

74,8 m -80 m
(245 ft - 263 ft)

12 m - 21 m
(39 ft - 69 ft)

92 500 kg
(203,900 lb)

27 ft 9 in spread
(100%)

360°

Pounds x 1000

Feet	245.3' + 39.4'			262.5' + 39.4'			245.3' + 68.9'			262.5' + 68.9'		
	5°	5°- 20°	20°- 40°	5°	5°- 20°	20°- 40°	5°	5°- 20°	20°- 40°	5°	5°- 20°	20°- 40°
55.0	18.6											
60.0	18.6	18.0		15.0	14.8							
65.0	18.6	18.0		15.0	14.8							
70.0	18.6	18.0		15.0	14.8		11.0			9.4		
75.0	18.6	18.0	18.0	15.0	14.8		11.0			9.4		
80.0	18.6	18.0	17.8	15.0	14.8	14.8	11.0	11.0		9.4	9.4	
85.0	18.6	18.0	17.6	15.0	14.8	14.8	11.0	11.0		9.4	9.4	
90.0	18.6	18.0	17.6	15.0	14.8	14.8	11.0	11.0		9.4	9.4	
95.0	18.6	18.0	17.4	15.0	14.8	14.8	11.0	11.0		9.4	9.4	
100.0	18.6	18.0	17.2	15.0	14.8	14.8	11.0	11.0	9.6	9.4	9.4	
105.0	18.6	18.0	17.2	15.0	14.8	14.8	11.0	11.0	9.4	9.4	9.4	9.4
110.0	18.6	18.0	17.0	15.0	14.8	14.8	11.0	11.0	9.4	9.4	9.4	9.2
115.0	18.6	18.0	17.0	15.0	14.8	14.8	11.0	10.8	9.2	9.4	9.4	9.2
120.0	18.6	18.0	16.8	15.0	14.8	14.8	11.0	10.6	9.2	9.4	9.4	9.2
125.0	18.6	18.0	16.8	15.0	14.8	14.8	11.0	10.6	9.2	9.4	9.4	9.0
130.0	18.6	18.0	16.6	15.0	14.8	14.8	11.0	10.4	9.0	9.4	9.4	9.0
135.0	18.4	18.0	16.6	15.0	14.8	14.8	11.0	10.2	9.0	9.4	9.4	9.0
140.0	17.8	17.6	16.4	15.0	14.8	14.8	11.0	10.2	9.0	9.4	9.4	8.8
145.0	17.0	17.0	16.4	15.0	14.8	14.8	11.0	10.0	8.8	9.4	9.4	8.8
150.0	16.2	16.2	16.2	15.0	14.8	14.6	11.0	9.8	8.8	9.4	9.4	8.8
155.0	15.4	15.4	15.6	14.6	14.6	14.4	11.0	9.8	8.8	9.4	9.4	8.8
160.0	14.6	14.6	15.0	14.2	14.2	14.2	11.0	9.6	8.8	9.4	9.4	8.6
165.0	14.0	14.0	14.4	13.8	13.6	13.6	10.8	9.6	8.6	9.4	9.4	8.6
170.0	13.4	13.4	13.6	13.2	13.2	13.2	10.6	9.4	8.6	9.4	9.4	8.6
175.0	12.6	12.6	13.0	12.4	12.4	12.8	10.4	9.4	8.6	9.4	9.2	8.6
180.0	11.8	11.8	12.4	12.0	12.0	12.2	10.4	9.2	8.6	9.4	9.2	8.6
185.0	11.0	11.0	11.6	11.4	11.4	11.8	10.2	9.2	8.6	9.4	9.2	8.4
190.0	10.4	10.4	11.0	10.8	10.8	11.2	10.0	9.0	8.6	9.4	9.0	8.4
195.0	9.6	9.6	10.2	10.2	10.2	10.6	10.0	9.0	8.4	9.4	9.0	8.4
200.0	9.0	9.0	9.6	9.6	9.6	10.0	9.6	9.0	8.4	9.4	8.8	8.4
205.0	8.6	8.6	8.8	9.0	9.0	9.6	9.4	8.8	8.4	9.2	8.8	8.4
210.0	8.2	8.2	8.4	8.4	8.4	9.0	9.0	8.8	8.4	8.8	8.6	8.4
215.0	7.8	7.8	8.0	8.0	8.0	8.4	8.4	8.4	8.4	8.6	8.6	8.4
220.0	7.4	7.4		7.4	7.4	7.8	7.8	7.8	8.4	8.2	8.2	8.4
225.0	7.0	7.0		6.8	6.8	7.2	7.4	7.4	8.2	7.8	7.8	8.0
230.0	6.6	6.6		6.4	6.4		6.8	6.8	7.6	7.4	7.4	7.8
235.0	6.2	6.2		5.8	5.8		6.4	6.4	7.0	6.8	6.8	7.6
240.0	5.8	5.8		5.2	5.2		6.0	6.0	6.6	6.4	6.4	7.2
245.0	5.6	5.6		4.6	4.6		5.8	5.8		6.0	6.0	6.6
250.0	5.2	5.2		4.0	4.0		5.4	5.4		5.6	5.6	6.2
255.0	4.8	4.8		3.4	3.4		5.2	5.2		5.0	5.0	5.6
260.0	4.4			3.0	3.0		4.8	4.8		4.4	4.4	
265.0				2.4	2.4		4.6	4.6		4.0	4.0	
270.0				2.0	2.0		4.2	4.2		3.4	3.4	
275.0							4.0	4.0		3.0	3.0	
280.0							3.8	3.8		2.4	2.4	
285.0							3.4	3.4		2.0	2.0	

Load chart
Hydraulic offsettable swingaway

Intermediate angle and loads for luffing

74,8 m -80 m
(245 ft - 263 ft)

12 m - 21 m
(39 ft - 69 ft)

54 500 kg
(120,100 lb)

27 ft 9 in spread
(100%)

360°

Pounds x 1000

Feet	245.3' + 39.4'			262.5' + 39.4'			245.3' + 68.9'			262.5' + 68.9'		
	5°	5°- 20°	20°- 40°	5°	5°- 20°	20°- 40°	5°	5°- 20°	20°- 40°	5°	5°- 20°	20°- 40°
55.0	18.6											
60.0	18.6	18.0		15.0	14.8							
65.0	18.6	18.0		15.0	14.8							
70.0	18.6	18.0		15.0	14.8		11.0			9.4		
75.0	18.6	18.0	18.0	15.0	14.8		11.0			9.4		
80.0	18.6	18.0	17.8	15.0	14.8	14.8	11.0	11.0		9.4	9.4	
85.0	18.6	18.0	17.6	15.0	14.8	14.8	11.0	11.0		9.4	9.4	
90.0	18.6	18.0	17.6	15.0	14.8	14.8	11.0	11.0		9.4	9.4	
95.0	18.6	18.0	17.4	15.0	14.8	14.8	11.0	11.0		9.4	9.4	
100.0	18.6	18.0	17.2	15.0	14.8	14.8	11.0	11.0	9.6	9.4	9.4	
105.0	18.6	18.0	17.2	15.0	14.8	14.8	11.0	11.0	9.4	9.4	9.4	9.4
110.0	18.6	18.0	17.0	15.0	14.8	14.8	11.0	11.0	9.4	9.4	9.4	9.2
115.0	18.0	18.0	17.0	15.0	14.8	14.8	11.0	10.8	9.2	9.4	9.4	9.2
120.0	17.4	17.0	16.8	15.0	14.8	14.8	11.0	10.6	9.2	9.4	9.4	9.2
125.0	17.4	16.6	16.0	15.0	14.8	14.8	11.0	10.6	9.2	9.4	9.4	9.0
130.0	16.2	16.2	15.6	14.0	14.0	14.8	11.0	10.4	9.0	9.4	9.4	9.0
135.0	14.8	14.8	15.2	12.6	12.6	13.6	11.0	10.2	9.0	9.4	9.4	9.0
140.0	13.6	13.6	14.6	11.4	11.4	12.4	11.0	10.2	9.0	9.4	9.4	8.8
145.0	12.4	12.4	13.2	10.2	10.2	11.2	11.0	10.0	8.8	9.4	9.4	8.8
150.0	11.2	11.2	12.2	9.0	9.0	10.0	10.6	9.8	8.8	9.4	9.4	8.8
155.0	10.2	10.2	11.0	8.0	8.0	9.0	10.6	9.6	8.8	9.4	9.4	8.8
160.0	9.2	9.2	10.0	7.0	7.0	8.0	10.6	9.6	8.8	8.8	8.8	8.6
165.0	8.4	8.4	9.0	6.2	6.2	7.0	9.8	9.4	8.6	7.8	7.8	8.6
170.0	7.4	7.4	8.2	5.4	5.4	6.0	9.0	9.0	8.6	7.0	7.0	8.4
175.0	6.4	6.4	7.2	4.6	4.6	5.2	8.2	8.2	8.6	6.2	6.2	7.6
180.0	5.6	5.6	6.2	3.6	3.6	4.4	7.4	7.4	8.6	5.4	5.4	6.8
185.0	4.6	4.6	5.4	2.8	2.8	3.6	6.6	6.6	7.8	4.6	4.6	6.0
190.0	3.8	3.8	4.4	2.0	2.0	2.8	5.8	5.8	7.0	4.0	4.0	5.2
195.0	3.2	3.2	3.6			2.0	5.0	5.0	6.2	3.2	3.2	4.4
200.0	2.4	2.4	3.0				4.2	4.2	5.4	2.6	2.6	3.8
205.0			2.2				3.6	3.6	4.6			3.0
210.0							3.0	3.0	4.0			2.4
215.0							2.4	2.4	3.2			
220.0									2.6			
225.0									2.0			

THIS CHART IS ONLY A GUIDE AND SHOULD NOT BE USED TO OPERATE THE CRANE.
The individual crane's load chart, operating instructions and other instructional plates must be read and understood prior to operating the crane.

Working range
Hydraulic offsettable swingaway with inserts

263 ft main boom with 39 ft - 69 ft swingaway and 2 X 26 ft inserts

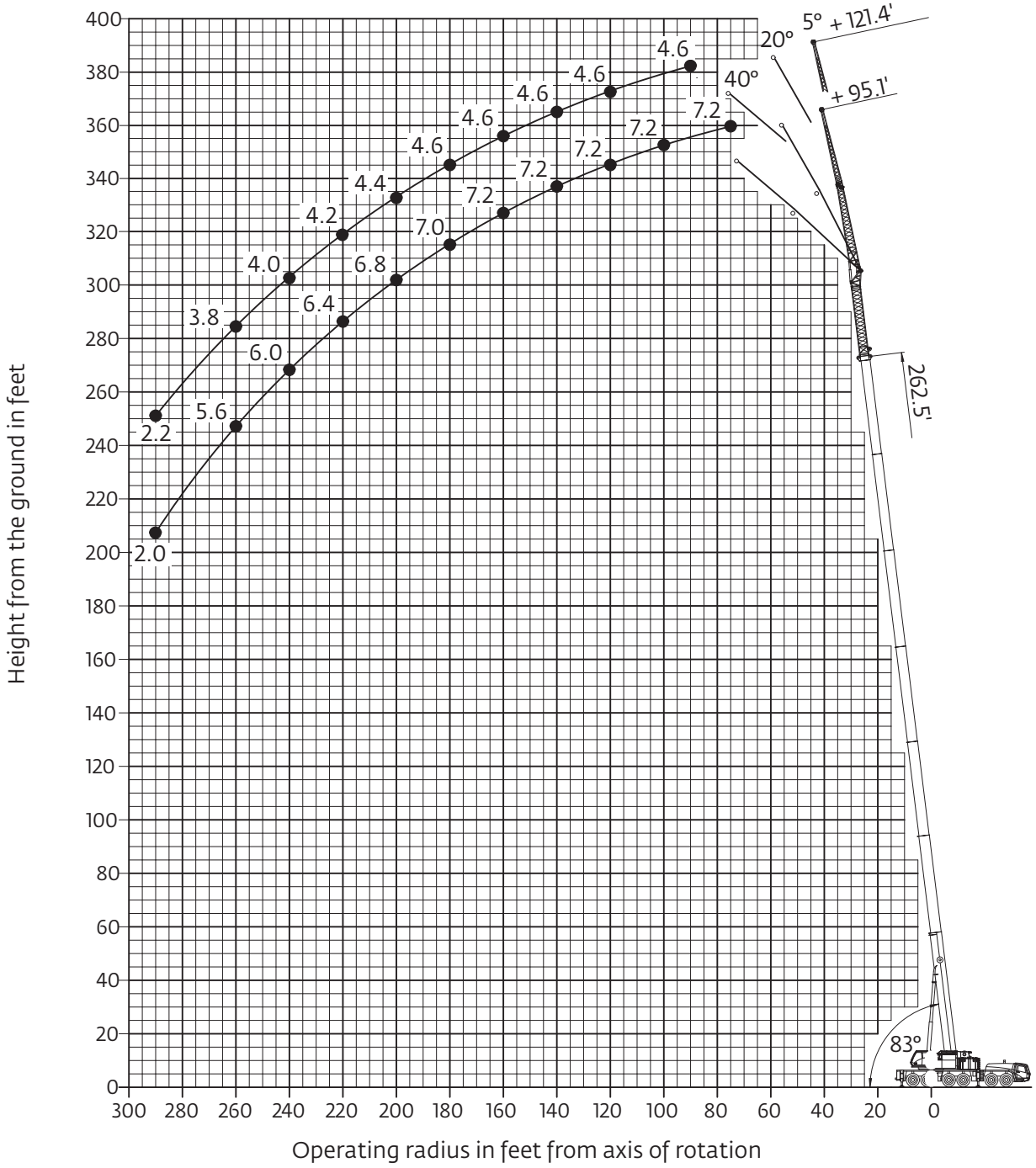

Hook heights shown in the working diagram do not consider loaded boom deflection.

Load chart
Hydraulic offsettable swingaway with inserts

74,8 m -80 m
(245 ft - 263 ft)

29 m - 37 m
(95 ft - 121 ft)

92 500 kg
(203,900 lb)

27 ft 9 in spread
(100%)

360˚

Pounds x 1000

Feet	245.3' + 95.1'			262.5' + 95.1'			245.3' + 121.4'			262.5' + 121.4'		
	5°	5°- 20°	20°- 40°	5°	5°- 20°	20°- 40°	5°	5°- 20°	20°- 40°	5°	5°- 20°	20°- 40°
75.0	8.4			7.2								
80.0	8.4			7.2			5.6					
85.0	8.4			7.2			5.6					
90.0	8.4			7.2			5.6			4.6		
95.0	8.4	8.4		7.2	7.2		5.6			4.6		
100.0	8.4	8.4		7.2	7.2		5.6	5.6		4.6	4.6	
105.0	8.4	8.4	7.0	7.2	7.2		5.6	5.6		4.6	4.6	
110.0	8.4	8.2	7.0	7.2	7.2		5.6	5.6		4.6	4.6	
115.0	8.4	8.2	7.0	7.2	7.2	6.2	5.6	5.6	4.4	4.6	4.6	
120.0	8.4	8.0	7.0	7.2	7.2	6.2	5.6	5.6	4.4	4.6	4.6	3.8
125.0	8.4	8.0	7.0	7.2	7.2	6.2	5.6	5.6	4.4	4.6	4.6	3.8
130.0	8.4	7.8	7.0	7.2	7.2	6.2	5.6	5.4	4.4	4.6	4.6	3.8
135.0	8.2	7.8	7.0	7.2	7.2	6.2	5.6	5.4	4.4	4.6	4.6	3.8
140.0	8.2	7.6	7.0	7.2	7.2	6.2	5.6	5.4	4.4	4.6	4.6	3.8
145.0	8.0	7.6	7.0	7.2	7.2	6.2	5.4	5.2	4.4	4.6	4.6	3.8
150.0	8.0	7.6	7.0	7.2	7.0	6.2	5.4	5.2	4.4	4.6	4.6	3.8
155.0	7.8	7.4	7.0	7.2	7.0	6.2	5.4	5.0	4.4	4.6	4.6	3.8
160.0	7.8	7.4	7.0	7.2	7.0	6.2	5.2	5.0	4.4	4.6	4.6	3.8
165.0	7.6	7.2	7.0	7.2	6.8	6.2	5.2	5.0	4.4	4.6	4.6	3.8
170.0	7.6	7.2	6.8	7.2	6.8	6.2	5.0	4.8	4.4	4.6	4.6	3.8
175.0	7.6	7.2	6.8	7.0	6.8	6.2	5.0	4.8	4.4	4.6	4.4	3.8
180.0	7.4	7.0	6.8	7.0	6.6	6.2	5.0	4.8	4.4	4.6	4.4	3.8
185.0	7.4	7.0	6.6	7.0	6.6	6.2	4.8	4.6	4.4	4.6	4.4	3.8
190.0	7.2	6.8	6.6	6.8	6.6	6.2	4.8	4.6	4.4	4.4	4.4	3.8
195.0	7.2	6.8	6.6	6.8	6.6	6.2	4.8	4.6	4.4	4.4	4.2	3.8
200.0	7.0	6.6	6.4	6.8	6.4	6.2	4.6	4.4	4.4	4.4	4.2	3.8
205.0	7.0	6.6	6.4	6.6	6.4	6.2	4.6	4.4	4.4	4.4	4.2	3.8
210.0	6.8	6.4	6.4	6.6	6.4	6.2	4.6	4.4	4.4	4.2	4.2	3.8
215.0	6.8	6.4	6.4	6.6	6.4	6.2	4.4	4.4	4.4	4.2	4.0	3.8
220.0	6.6	6.2	6.2	6.4	6.2	6.2	4.4	4.2	4.4	4.2	4.0	3.8
225.0	6.6	6.2	6.2	6.4	6.2	6.2	4.4	4.2	4.4	4.2	4.0	3.8
230.0	6.4	6.2	6.2	6.4	6.0	6.2	4.2	4.2	4.4	4.0	4.0	3.8
235.0	6.4	6.0	6.2	6.2	6.0	6.0	4.2	4.0	4.2	4.0	4.0	3.8
240.0	6.0	6.0	6.0	6.0	6.0	6.0	4.2	4.0	4.2	4.0	3.8	3.8
245.0	5.6	5.8	6.0	6.0	5.8	6.0	4.0	4.0	4.2	4.0	3.8	3.8
250.0	5.2	5.4	6.0	5.8	5.8	6.0	4.0	4.0	4.0	3.8	3.8	3.8
255.0	4.8	5.2	5.6	5.4	5.4	5.8	4.0	4.0	4.0	3.8	3.8	3.8
260.0	4.6	5.0		4.8	4.8	5.6	4.0	3.8	4.0	3.8	3.8	3.8
265.0	4.4	4.6		4.4	4.4	5.0	3.8	3.8	4.0	3.8	3.6	3.8
270.0	4.0	4.4		3.8	3.8		3.6	3.6	3.8	3.6	3.6	3.8
275.0	3.8	4.0		3.2	3.2		3.4	3.6	3.8	3.6	3.6	3.8
280.0	3.6	3.8		2.8	2.8		3.2	3.6		3.0	3.0	3.6
285.0	3.2	3.6		2.4	2.4		3.0	3.4		2.6	2.6	
290.0	3.0	3.2		2.0	2.0		2.8	3.0		2.2	2.2	
295.0	2.8	3.0					2.6	2.8				
300.0	2.6	2.6					2.2	2.6				
305.0	2.2						2.0	2.4				
310.0	1.8											

THIS CHART IS ONLY A GUIDE AND SHOULD NOT BE USED TO OPERATE THE CRANE.
The individual crane's load chart, operating instructions and other instructional plates must be read and understood prior to operating the crane.

Load chart

Hydraulic offsettable swingaway with inserts

74,8 m -80 m
(245 ft - 263 ft)

29 m - 37 m
(95 ft - 121 ft)

92 500 kg
(203,900 lb)

27 ft 9 in spread
(100%)

360°

Pounds x 1000

Feet	245.3' + 95.1'			262.5' + 95.1'			245.3' + 121.4'			262.5' + 121.4'		
	5°	5°- 20°	20°- 40°	5°	5°- 20°	20°- 40°	5°	5°- 20°	20°- 40°	5°	5°- 20°	20°- 40°
75.0	8.4			7.2								
80.0	8.4			7.2			5.6					
85.0	8.4			7.2			5.6					
90.0	8.4			7.2			5.6			4.6		
95.0	8.4	8.4		7.2	7.2		5.6			4.6		
100.0	8.4	8.4		7.2	7.2		5.6	5.6		4.6	4.6	
105.0	8.4	8.4	7.0	7.2	7.2		5.6	5.6		4.6	4.6	
110.0	8.4	8.2	7.0	7.2	7.2		5.6	5.6		4.6	4.6	
115.0	8.4	8.2	7.0	7.2	7.2	6.2	5.6	5.6	4.4	4.6	4.6	
120.0	8.4	8.0	7.0	7.2	7.2	6.2	5.6	5.6	4.4	4.6	4.6	3.8
125.0	8.4	8.0	7.0	7.2	7.2	6.2	5.6	5.6	4.4	4.6	4.6	3.8
130.0	8.4	7.8	7.0	7.2	7.2	6.2	5.6	5.4	4.4	4.6	4.6	3.8
135.0	8.2	7.8	7.0	7.2	7.2	6.2	5.6	5.4	4.4	4.6	4.6	3.8
140.0	8.2	7.6	7.0	7.2	7.2	6.2	5.6	5.4	4.4	4.6	4.6	3.8
145.0	8.0	7.6	7.0	7.2	7.2	6.2	5.4	5.2	4.4	4.6	4.6	3.8
150.0	8.0	7.6	7.0	7.2	7.0	6.2	5.4	5.2	4.4	4.6	4.6	3.8
155.0	7.8	7.4	7.0	7.2	7.0	6.2	5.4	5.0	4.4	4.6	4.6	3.8
160.0	7.8	7.4	7.0	7.2	7.0	6.2	5.2	5.0	4.4	4.6	4.6	3.8
165.0	7.4	7.2	7.0	7.2	6.8	6.2	5.2	5.0	4.4	4.6	4.6	3.8
170.0	7.4	7.0	6.8	7.0	6.8	6.2	5.0	4.8	4.4	4.6	4.6	3.8
175.0	7.4	7.0	6.8	6.2	6.2	6.2	5.0	4.8	4.4	4.6	4.4	3.8
180.0	7.2	6.8	6.6	5.4	5.4	6.2	5.0	4.8	4.4	4.6	4.4	3.8
185.0	6.6	6.6	6.6	4.8	4.8	6.0	4.8	4.6	4.4	4.6	4.4	3.8
190.0	6.0	6.0	6.6	4.0	4.0	5.2	4.6	4.4	4.4	4.0	4.0	3.8
195.0	5.2	5.2	6.4	3.4	3.4	4.6	4.6	4.4	4.4	3.4	3.4	3.8
200.0	4.6	4.6	5.8	2.8	2.8	4.0	4.6	4.4	3.6	2.8	2.8	3.8
205.0	4.0	4.0	5.0	2.2		3.2	4.0	4.0	3.0	2.2	2.2	3.4
210.0	3.4	3.4	4.4			2.6	3.4	3.4	2.4			2.6
215.0	2.6	2.6	3.8			2.0	2.8	2.8				2.2
220.0	2.0	2.0	3.0				2.4	2.4				
225.0			2.4									
230.0			1.8									

THIS CHART IS ONLY A GUIDE AND SHOULD NOT BE USED TO OPERATE THE CRANE.
The individual crane's load chart, operating instructions and other instructional plates must be read and understood prior to operating the crane.

Working range
Heavy duty jib

Heavy duty jib 6.6 ft

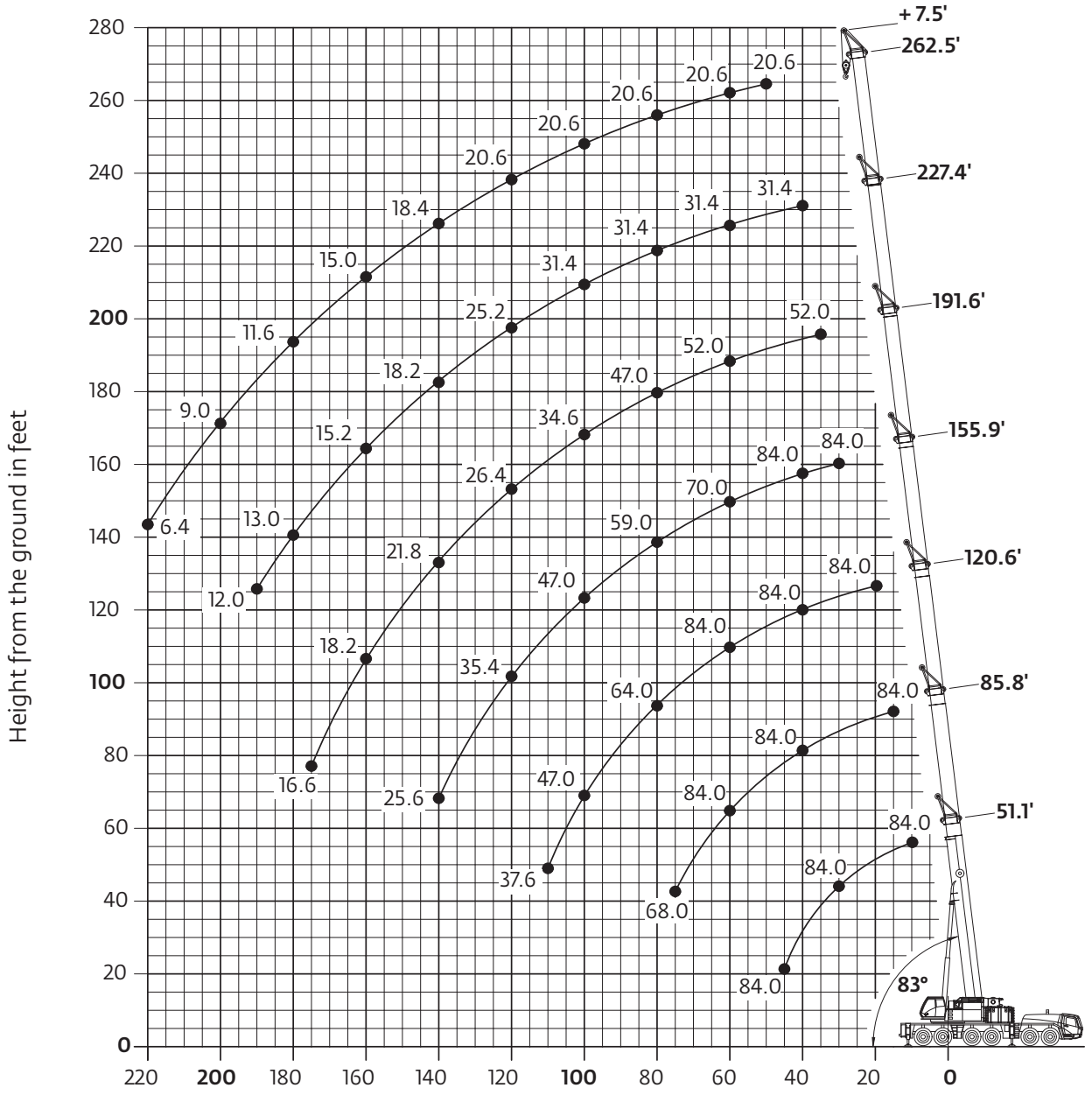

Hook heights shown in the working diagram do not consider loaded boom deflection.

Load chart
Heavy duty jib

Fixed angle

15,6 m-80 m
(51 ft-263 ft)

2 m
(6.6 ft)

92 500 kg
(203,900 lb)

27 ft 9 in ft spread
(100%)

360°

Pounds (thousands)

Feet	51.1' + 6.6'		85.8' + 6.6'		120.6' + 6.6'		155.9 + 6.6'		191.6' + 6.6'		227.4' + 6.6'		262.5' + 6.6'	
	8°	30°	8°	30°	8°	30°	8°	30°	8°	30°	8°	30°	8°	30°
10.0		84.0												
15.0		84.0		84.0										
20.0		84.0		84.0		84.0								
25.0		84.0		84.0		84.0								
30.0		84.0		84.0		84.0		84.0						
35.0	84.0	84.0		84.0		84.0		84.0		52.0				
40.0	84.0	84.0		84.0		84.0		84.0		52.0		31.4		
45.0	84.0			84.0		84.0		80.0		52.0		31.4		
50.0				84.0		84.0		76.0		52.0		31.4		20.6
55.0				84.0		84.0		73.0		52.0		31.4		20.6
60.0			84.0	84.0		84.0		70.0		52.0		31.4		20.6
65.0			84.0	84.0		78.0		67.0		52.0		31.4		20.6
70.0			77.0	77.0		73.0		64.0		52.0		31.4		20.6
75.0			68.0			68.0		61.0		50.0		31.4		20.6
80.0					64.0	63.0		59.0		47.0		31.4		20.6
85.0					59.0	60.0		57.0		43.4		31.4		20.6
90.0					55.0	55.0		55.0		40.0		31.4		20.6
95.0					51.0	51.0		51.0		37.2		31.4		20.6
100.0					47.0			47.0		34.6		31.4		20.6
105.0					43.4		43.4	43.8		32.2		30.4		20.6
110.0					37.6		40.2	40.8		30.2		28.8		20.6
115.0							37.4	37.8		28.2		27.0		20.6
120.0							35.0	35.4		26.4		25.2		20.6
125.0							32.4	32.8		24.8		23.0		20.6
130.0							30.0	30.2		23.0		20.8		20.6
135.0							27.8		22.8	21.4		19.2		19.6
140.0							25.6		21.8	20.4		18.2		18.4
145.0									20.6	19.8		17.4		17.6
150.0									19.4	19.2		16.6		16.8
155.0									18.8	18.6		16.0		15.8
160.0									18.2			15.2		15.0
165.0									17.6			14.6		14.2
170.0									17.0			14.0		13.2
175.0									16.6			13.4		12.4
180.0												13.0		11.6
185.0												12.4		11.0
190.0												12.0		10.2
195.0														9.6
200.0														9.0
205.0														8.2
210.0														7.6
215.0														7.0
220.0														6.4

THIS CHART IS ONLY A GUIDE AND SHOULD NOT BE USED TO OPERATE THE CRANE.
The individual crane's load chart, operating instructions and other instructional plates must be read and understood prior to operating the crane.

Load chart
Heavy duty jib

Fixed angle

15,6 m-80 m
(51 ft-263 ft)

2 m
(6.6 ft)

54 500 kg
(120,100 lb)

27 ft 9 in spread
(100%)

360°

Pounds (thousands)

Feet	51.1' + 6.6'		85.8' + 6.6'		120.6' + 6.6'		155.9 + 6.6'		191.6' + 6.6'		227.4' + 6.6'		262.5' + 6.6'	
	8°	30°	8°	30°	8°	30°	8°	30°	8°	30°	8°	30°	8°	30°
10.0		84.0												
15.0		84.0		84.0										
20.0		84.0		84.0		84.0								
25.0		84.0		84.0		84.0								
30.0		84.0		84.0		84.0		84.0						
35.0	84.0	84.0		84.0		84.0		84.0		52.0				
40.0	84.0	84.0		84.0		84.0		84.0		52.0		31.4		
45.0	84.0			84.0		84.0		80.0		52.0		31.4		
50.0				84.0		84.0		76.0		52.0		31.4		20.6
55.0				82.0		77.0		72.0		52.0		31.4		20.6
60.0			70.0	71.0		68.0		64.0		52.0		31.4		20.6
65.0			63.0	62.0		61.0		57.0		50.0		31.4		20.6
70.0			57.0	58.0		55.0		51.0		44.0		31.4		20.6
75.0			50.0			49.0		46.0		39.6		31.4		20.6
80.0					48.0	47.0		41.4		35.6		31.4		20.6
85.0					42.8	43.4		37.4		33.8		30.8		20.6
90.0					38.6	39.2		34.0		32.2		29.2		20.6
95.0					34.8	35.4		31.6		30.8		28.0		20.6
100.0					31.6			30.4		29.4		27.0		20.6
105.0					28.6		28.8	29.2		27.0		25.6		20.6
110.0					26.2		26.2	26.8		24.8		23.6		19.2
115.0							23.8	24.4		22.8		21.6		17.4
120.0							21.8	22.2		20.6		19.8		15.6
125.0							19.8	20.2		18.6		18.6		14.0
130.0							18.6	18.4		16.8		17.0		12.6
135.0							17.8		16.6	16.0		15.6		11.2
140.0							17.2		15.8	15.0		14.2		10.0
145.0									14.6	14.4		12.8		8.8
150.0									13.2	13.6		11.4		7.6
155.0									12.0	12.8		10.2		6.6
160.0									11.0			9.0		5.6
165.0									10.0			8.0		4.6
170.0									9.0			7.0		3.6
175.0									8.2			6.0		
180.0												5.2		
185.0												4.4		
190.0												3.6		
195.0														
200.0														
205.0														
210.0														
215.0														
220.0														

THIS CHART IS ONLY A GUIDE AND SHOULD NOT BE USED TO OPERATE THE CRANE.
The individual crane's load chart, operating instructions and other instructional plates must be read and understood prior to operating the crane.

Symbols glossary

Axles

Counterweight

Grade

Gear

Boom

Drive

Heavy duty jib

Radius

Boom elevation

Electrical system

Hoist

Rotation

Boom extension

Engine

Hookblock

Speed

Boom length

Extension

Hydraulic system

Steering

Boom nose

Frame

Lights

Suspension

Brakes

Fuel tank capacity

Oil

Swing

Cab

Outriggers

Outrigger controls

Tires

Transmission

Notes

Notes

Manitowoc Cranes

Regional headquarters

Americas
Manitowoc, Wisconsin, USA
Tel: +1 920 684 6621
Fax: +1 920 683 6277

Shady Grove, Pennsylvania, USA
Tel: +1 717 597 8121
Fax: +1 717 597 4062

Europe, Middle East, Africa
Ecully, France
Tel: +33 (0)4 72 18 20 20
Fax: +33 (0)4 72 18 20 00

China
Shanghai, China
Tel: +86 21 6457 0066
Fax: +86 21 6457 4955

Greater Asia-Pacific
Singapore
Tel: +65 6264 1188
Fax: +65 6862 4040

Regional offices

Americas
Brazil
Alphaville
Mexico
Monterrey
Chile
Santiago

Europe, Middle East, Africa
Czech Republic
Netvorice
France
Baudemont
Cergy
Decines
Germany
Langenfeld
Hungary
Budapest
Italy
Lainate
Netherlands
Breda
Poland
Warsaw
Portugal
Baltar
Russia
Moscow
South Africa
Johannesburg
U.A.E.
Dubai
U.K.
Buckingham

China
Beijing
Chengdu
Guangzhou
Xian

Greater Asia-Pacific
Australia
Brisbane
Melbourne
Sydney
India
Chennai
Delhi
Hyderabad
Pune
Korea
Seoul
Philippines
Makati City
Singapore

Factories

Brazil
Passo Fundo
China
TaiAn
Zhangjiagang
France
Charlieu
Moulins
Germany
Wilhelmshaven
India
Pune
Italy
Niella Tanaro
Portugal
Baltar
Fânzeres
Slovakia
Saris
USA
Manitowoc
Port Washington
Shady Grove

This document is non-contractual. Constant improvement and engineering progress make it necessary that we reserve the right to make specification, equipment, and price changes without notice. Illustrations shown may include optional equipment and accessories and may not include all standard equipment.

©2012 Manitowoc
Form No. GMK6300L PG
Part No. 10-008 / 0512 / 2M